Drawing

	Batch #	Appliance part#
Hendi B.V. Steenoven 21 3911 TX Rhenen The Netherlands	0000000	147108
	Description	
	Hokker "Big Flame"	

Date	07-06-2012	**Revision #**	Revision version
Revision	First bill of materials (BOM)		

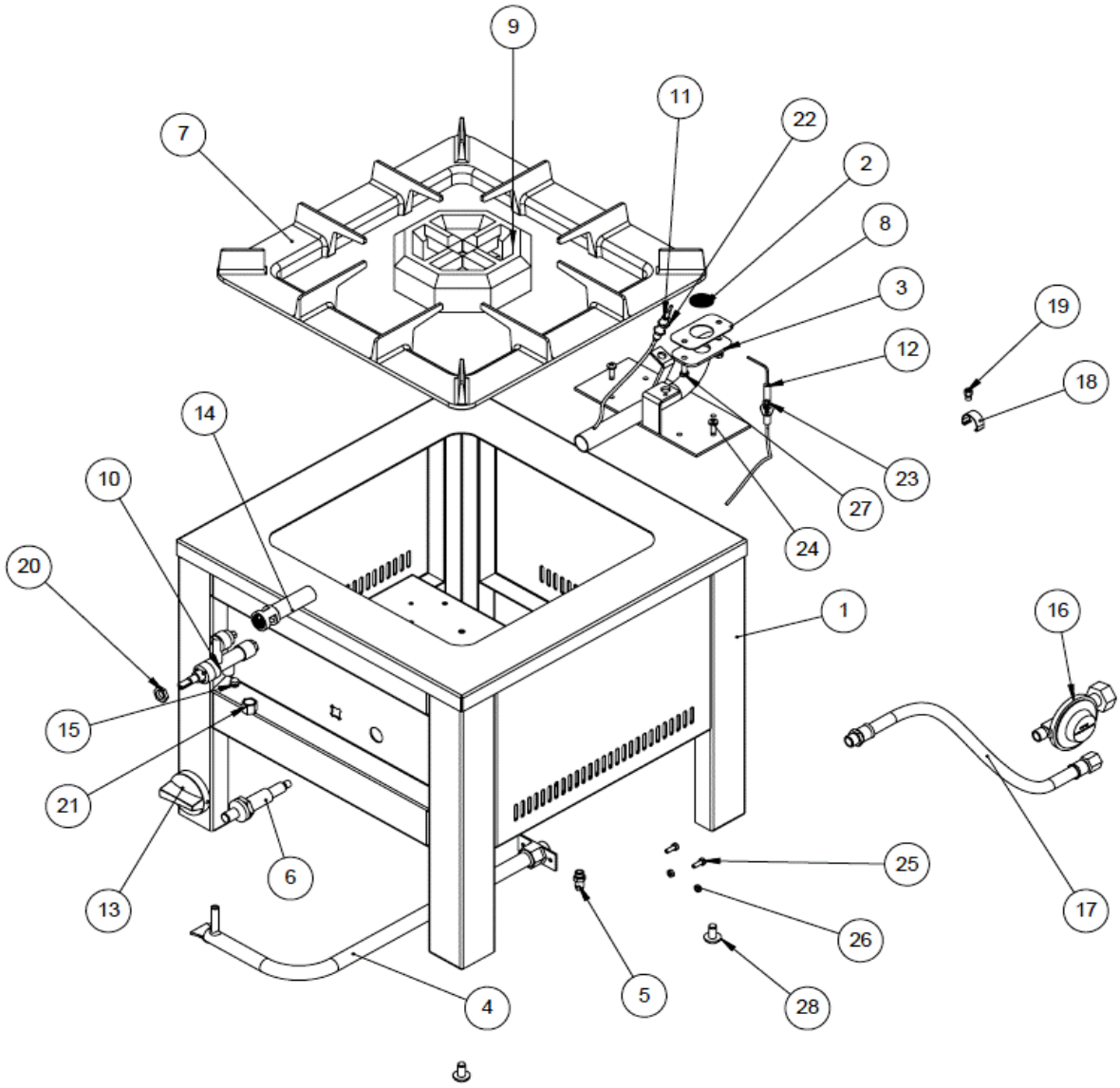

Bill of materials (BOM)

Hendi B.V.
Steenoven 21
3911 TX Rhenen
The Netherlands

Batch #	Appliance part#
0000000	147108
Description	
Hokker "Big Flame"	

Date	07-06-2012	**Revision #**	Revision version
Revision	First bill of materials (BOM)		

Item	Description	Part#	Quantity	Remark	Picture
1	Frame	n/a	1		
2	Mesh burner	924051	1		
3	Intake pipe	n/a	1		
4	Inlet pipe	147191	1		
5	Pressure nippel	924037	1		
6	Piezo igniter	153178	1	Incl nut	
7	Pan support 40x40cm	147177	1		
8	Gasket	924044	1		
9	Gas burner	924075	1		
10	Gas valve	147115	1	Incl item 20	
11	Thermo couple	152195	1	Incl 2 pcs of item 22	
12	Electrode with wiring	145654	1		
13	Knob	145692	1		
14	Air intake	n/a	1		
15	Cutting ring	nss	1	Available as 152089	
16a	Regulator 50mBar	152157	1		
16b	Regulator 37mBar	152188	1		
16c	Regulator 37mBar UK	153161	1	*Note Only for United Kingdom	
17	Hose assembly	147139	1		
18	Clip	147184	1	Incl item 21, only for natural gas	
19	Sproeier 1,90 mm gaskraan	nss	1	Available as 147184	
20	Nut M12x1	nss	1	Available as 147115	
21	Nut M12x1	152089	1	Incl item 15	
22	Nut M 8x1	nss	2	Available as 152195	
23	Sheet metal screw	n/a	1		
24	Sheet metal screw	n/a	2		
25	Bolt M4x12	n/a	2		
26	Nut M4	n/a	2		
27	Bolt M5x12	n/a	2		
28	Buffer	n/a	4		

n/a -> not available **nss -> not sold separately**